Paul N. Gardner Company

USER MANUAL

Information and instructions for GARDCO distributed products.

9104 Guilford Rd. Suite H | Columbia, MD 21046 | 954.946.9454 | gardco.com | gardco@altana.com

Circulating Baths with MX Temperature Controller

Operator's Manual

Models:
MX07R-20
MX7LR-20
MX15R-30
MX20R-30
MX07H135
MX15H135
MX20H135
MX06S135
MX10S135
MX20S135
MX28S135
MX08P100
MX11P100
MX14P100
MX17P100
MX23P100
MX28P100
MX17VB6G
MX27VB6G
MX28C135



110-509 PSC/EN 07 May 2018

Table of Contents

Introduction **2**
- PolyScience Circulating Baths with the MX Temperature Controller 2
- General Safety Information 3
- Safety Recommendations 4
- Regulatory Compliance and Testing 5
- Unpacking Your Circulator 5
- Package Contents 6
- Controls and Components 7

Quick-Start **11**

Installation and Startup **13**
- General Site Requirements 13
- Adding Liquid to the Bath Reservoir 13
- External Closed Loop Circulation 14
- Refrigeration Control Connections (Refrigerating/Heating Circulators only) 15
- Electrical Power 16
- Controller Setup 17
  - Power 17
  - Safety Set Temperature 17

Normal Operation **18**
- Keys and Controls 18
- Turning Your Circulator ON 18
- Main Operational Display 18
- Set-Up Sub-Menus 19
- Adjusting the Temperature Set Point 19
- Selecting the Temperature Unit 20
- Setting the Offset Calibration 21
- Setting the Low Limit Temperature 22
- Setting the High Limit Temperature 23
- Adjusting the Auto Cool Temperature 24
- Resetting the Factory Default Values 25
- Loss of Power Restart 25
- Tap Water Cooling 26
- Reservoir Cover Storage 26

Display Messages and Alarms **27**

Routine Maintenance and Troubleshooting **28**
- Maintaining Clear Bath Water 28
- Draining the Bath Reservoir 28
- Checking the Over-Temperature Safety System 29
- Cleaning Your Circulator 30
  - Temperature Controller 30
  - Bath Reservoir 30
  - Condenser, Air Vents, and Reusable Filter (Refrigerated Models only) 30
- Temperature Controller Removal and Re-Installation 31
- Troubleshooting Chart 33

Technical Information **35**
- Performance Specifications 35
- Reservoir Fluids 37
- Application Notes 38

Equipment Disposal (WEEE Directive) **39**

Replacement Parts and Accessories **40**

PolyScience Circulating Bath Fluids **41**

Service and Technical Support **42**

Warranty **42**

Introduction

Thank you for choosing a PolyScience Circulating Bath with MX Temperature Controller. It is intended for the precise temperature control of suitable liquids in a reservoir. Extremely easy to use and maintain, it combines design innovation with highly intuitive operation to deliver convenient and versatile liquid temperature control for a wide range of applications.



WARNING: PolyScience Circulating Baths are not intended for directly controlling the temperature of foods, pharmaceuticals, medicines, or other objects which may be ingested by or injected in humans or animals. Any such objects must be isolated from contact with the bath fluid and bath surfaces**.**

Here are some of the features that make your Circulating Bath so user-friendly:

- Simple, intuitive operation
- Displays actual and set point temperature simultaneously
- Powerful pump, easy flow adjustment
- External circulation capability
- Fully enclosed housing prevents direct contact with pump and heater, yet provides quick access for inspection and cleaning
- Suitable for use with Class I non-flammable fluids per DIN 12876-1

It will take you very little time to get your new Circulating Bath installed and running. This Instruction Manual is designed to guide you quickly through the process. We recommend that you read it thoroughly before you begin.

PolyScience Circulating Baths with the MX Temperature Controller

Model Type	Reservoir Capacity	Temperature Range	
		°C	°F
MX07R-20 Refrigerating / Heating Bath	7 liters	-20° to 135°C	-4° to 275°F
MX7LR-20 Refrigerating / Heating Bath	7 liters	-20° to 135°C	-4° to 275°F
MX15R-30 Refrigerating / Heating Bath	15 liters	-30° to 135°C	-22° to 275°F
MX20R-30 Refrigerating / Heating Bath	20 liters	-30° to 135°C	-22° to 275°F
MX07H135 Heating Only Bath	7 liters	Ambient +10° to 135°C	Ambient +20° to 275°F
MX15H135 Heating Only Bath	15 liters	Ambient +10° to 135°C	Ambient +20° to 275°F
MX20H135 Heating Only Bath	20 liters	Ambient +10° to 135°C	Ambient +20° to 275°F
MX06S135 Stainless Steel Open Tank Bath	6 liters	Ambient +10° to 135°C	Ambient +20° to 275°F
MX10S135 Stainless Steel Open Tank Bath	10 liters	Ambient +10° to 135°C	Ambient +20° to 275°F
MX20S135 Stainless Steel Open Tank Bath	20 liters	Ambient +10° to 135°C	Ambient +20° to 275°F
MX28S135 Stainless Steel Open Tank Bath	28 liters	Ambient +10° to 135°C	Ambient +20° to 275°F
MX08P100 Polycarbonate Open Tank Bath	8 liters	Ambient +10° to 85°C (1)	Ambient +20° to 185°F (1)
MX11P100 Polycarbonate Open Tank Bath	11 liters	Ambient +10° to 85°C (1)	Ambient +20° to 185°F (1)
MX14P100 Polycarbonate Open Tank Bath	14 liters	Ambient +10° to 85°C (1)	Ambient +20° to 185°F (1)
MX17P100 Polycarbonate Open Tank Bath	17 liters	Ambient +10° to 85°C (1)	Ambient +20° to 185°F (1)
MX23P100 Polycarbonate Open Tank Bath	23 liters	Ambient +10° to 85°C (1)	Ambient +20° to 185°F (1)
MX28P100 Polycarbonate Open Tank Bath	28 liters	Ambient +10° to 85°C (1)	Ambient +20° to 185°F (1)
MX17VB6G Glass Viscosity Bath	17 liters	Ambient +10° to 135°C	Ambient +20° to 275°F
MX27VB6G Glass Viscosity Bath	27 liters	Ambient +10° to 135°C	Ambient +20° to 275°F
MX28C135 Coliform Bath	28 liters	Ambient +10° to 135°C	Ambient +20° to 275°F

1. Maximum operating temperature for polycarbonate tank; MX Controller is capable of higher temperatures.

General Safety Information

When installed, operated, and maintained according to the directions in this manual and common safety procedures, your Circulating Bath should provide safe and reliable temperature control. Please ensure that all individuals involved in the installation, operation, or maintenance of this Circulating Bath read this manual thoroughly prior to working with the unit.

	This symbol alerts you to a wide range of potential dangers.
	This symbol advises danger from electricity or electric shock.
	This symbol indicates that a hot surface may be present.
	This symbol marks information that is particularly important.
	This symbol indicates alternating current.
	These symbols on the Power Switch / Circuit Breaker indicate that they place the main power supply ON / OFF.
	This symbol on the Power Key indicates that it places the unit in a standby mode. It DOES NOT fully disconnect the unit from the power supply.
	This symbol indicates a protective conductor terminal.

Read all instructions pertaining to safety, set-up, operation, and maintenance.
Proper operation is the user's responsibility.

Safety Recommendations

To prevent injury to personnel and/or damage to property, always follow your workplace's safety procedures when operating this equipment. You should also comply with the following safety recommendations:



WARNING:

- This Circulating Bath is suitable only for use with Class I non-flammable fluids (per DIN 12876-1).
- Be aware of the chemical hazards that may be associated with the bath fluid used. Observe all safety warnings for the fluids used as well as those contained in the material safety data sheet.
- Use only recommended bath fluids; see *Technical Information* in the rear of this manual for recommended fluids.
- Use only non-acid bath fluids.



WARNING:

- Always connect the power cord on this Circulator to a grounded (3-prong) power outlet. Make certain that the outlet is the same voltage and frequency as your unit.
- Never operate the Circulator with a damaged power cord.
- Always turn the Circulator OFF and disconnect mains power before performing any maintenance or service.



WARNING:

- Never operate the Circulator without bath fluid in the reservoir. Periodically check the reservoir to ensure that the liquid depth is within acceptable levels. Always refill the reservoir using the same bath fluid that is already in the reservoir. Bath oil must not contain any water contaminants and should be preheated to the actual bath temperature before adding as there is an explosion hazard at high temperatures.
- Always drain all fluid from the reservoir before moving or lifting your Circulator. Be sure to follow your organization's procedures and practices regarding the safe lifting and relocation of heavy objects.



WARNING:

- Always allow the bath fluid to cool to ambient temperature before draining.
- The reservoir cover, top deck, and/or external pump connections may become hot with continuous use. Exercise caution when touching these parts.
- Always keep within the 85°C maximum operating temperature limit if using a polycarbonate open bath tank.



WARNING: It is the user's responsibility to properly decontaminate the unit in the event hazardous materials are spilled on exterior or interior surfaces. Consult manufacturer if there is any doubt regarding the compatibility of decontamination or cleaning agents.

Regulatory Compliance and Testing

This equipment is compliant with the European Directive 2002/95/EC and its latest amendments on Restrictions on Hazardous Substances (RoHS) and below the given limits of hazardous substances.

ETL Intertek (60 Hz units)

UL 61010-1 / CSA C22.2 No. 61010-1 — Safety Requirements for Measurement, Control, and Laboratory Use; Part 1: General Requirements

UL 61010A-2-010 / CSA C22.2 No. 61010-2-010:04 — Safety Requirements for Measurement, Control, and Laboratory Use; Part 2-010: Particular Requirements for Laboratory Equipment for the Heating of Materials

UL 61010A-2-051 / CSA C22.2 No. 61010-2-051:04 — Safety Requirements for Measurement, Control, and Laboratory Use; Part 2-051: Particular Requirements for Laboratory Equipment for the Mixing and Stirring

CE (all units)

EC Low Voltage Directive 2006/95/EC

EC Electromagnetic Compatibility Directive 2004/108/EC

IEC 61010-1-2001

IEC 61010-2-2001

IEC 61326:2005 / EN 61326 : 2006

Unpacking Your Circulator

Your Circulator is packed in a special carton or cartons. You should keep the packaging, along with all packing materials, until the unit has been installed and you are certain it is working properly.



CAUTION: Remove any loose packing material that may have fallen into the heater/pump housing during shipping. Before powering up, check that nothing remains around the heater or Circulator pump.

We recommend that you begin using your Circulator immediately to confirm proper operation, since beyond one week you may be eligible for warranty repair only (rather than replacement). You'll find complete warranty information in the back of this manual.

In the unlikely event that the unit was damaged or does not operate properly, immediately contact the transportation company, file a damage claim, and contact the company where your Circulator was purchased.

Package Contents

The items included with your Circulator will vary depending on which model Circulating Bath you purchased.

	Refrigerating / Heating Bath	Heating Only Bath	Stainless Steel Open Tank Bath	Polycarbonate Open Tank Bath	Glass Viscosity Bath	Coliform Bath
Resource Disk (with Operator's Manual)	●	●	●	●	●	●
Reservoir Lid	●	●	●	●	●	
Gable Cover						●
3-ft. / 0.91 m IEC to IEC Power Cord	●					
6-ft. / 1.82 m IEC to Mains Power Cord	●	●	●	●	●	●
Refrigeration Control Cable	●					
Fitting Kit for External Applications	●	●	●	●		
Cooling Coil	N/A	Integral	Optional (1)	Optional (2)	●	Optional (2)
Qualification Test Results	●	●	●	●	●	●
Quick-Start Guide	●	●	●	●	●	●

1. 10, 20 and 28 liter Stainless Steel Open Tank Baths have a lidded opening that accommodates an optional cooling coil.
2. The Coliform Bath and 17, 23 and 28 liter Polycarbonate Open Tank Baths have a lidded opening that accommodates an optional cooling coil.

Controls and Components

MX Controller

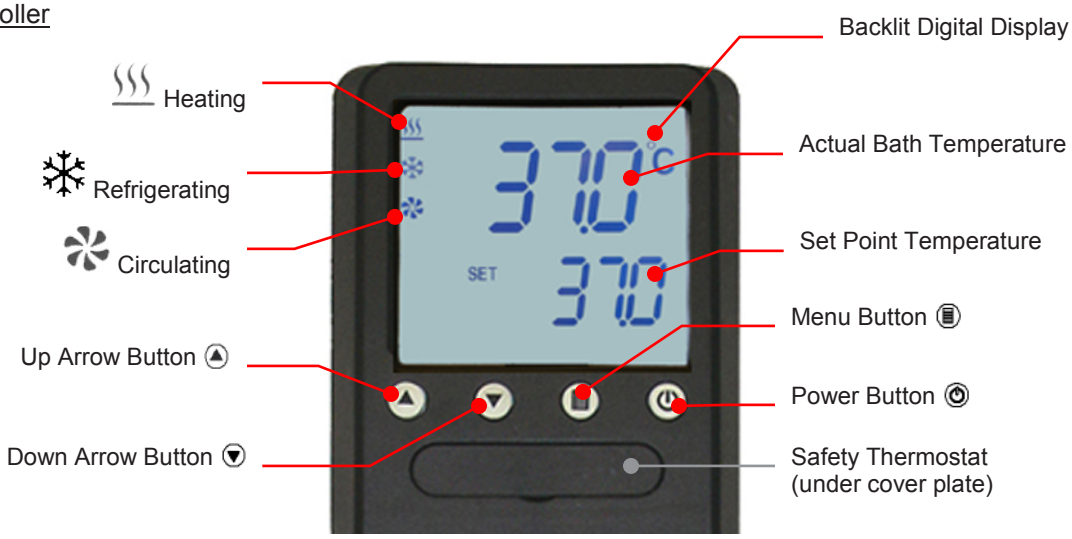

Refrigerating/Heating Baths



Heating Only Baths



Open Bath Systems (stainless steel)



	WARNING: The top deck on Open Bath Systems is not attached. Do not remove deck while Circulator is operating. Do not lift bath by grasping the Temperature Controller or top deck. Always disconnect electrical power and drain fluid from bath before moving.

	WARNING: To avoid the potential for burns, allow the Circulator to cool completely before cleaning or performing any maintenance.

Open Bath Systems (polycarbonate)

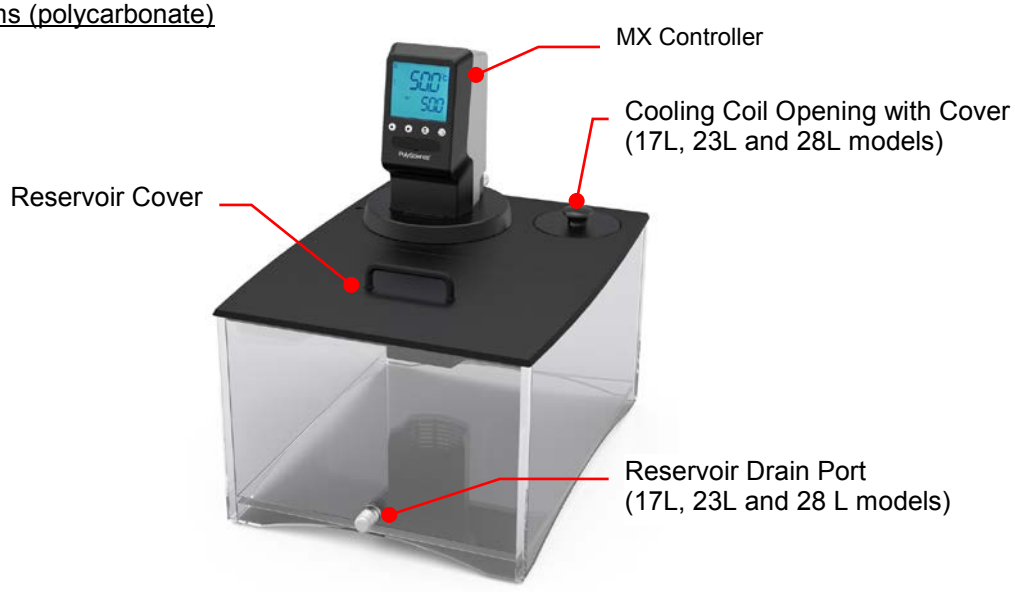

	CAUTION: The top deck on Open Bath Systems is not attached. Do not remove deck while Circulator is operating. Do not lift bath by grasping the Temperature Controller or top deck. Always disconnect electrical power and drain fluid from bath before moving.

	WARNING: To avoid the potential for burns, allow the Circulator to cool completely before cleaning or performing any maintenance.

Viscosity Baths (glass)



	WARNING: The top deck on Viscosity Baths is not attached. Do not remove deck while Circulator is operating. Do not lift bath by grasping the Temperature Controller or top deck. Always disconnect electrical power and drain fluid from bath before moving.

	WARNING: To avoid the potential for burns, allow the Circulator to cool completely before cleaning or performing any maintenance.

Coliform Bath



Quick-Start

Unless otherwise specified, quick-start instructions apply to all models.

See Installation & Startup for additional information.

<table>
<tr><td>1</td><td>Fill reservoir with fluid</td><td>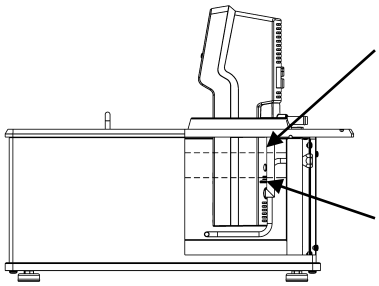
</td></tr>
<tr><td rowspan="2">2</td><td rowspan="2">Connect all power cords and control cables</td><td>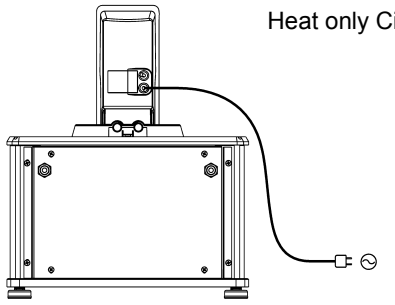
</td></tr>
<tr><td>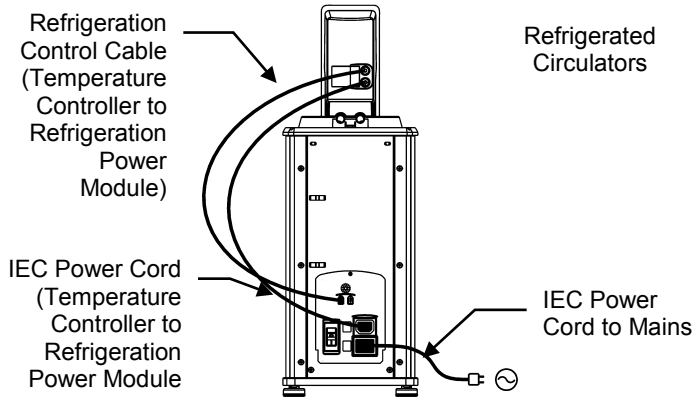
</td></tr>
<tr><td>3</td><td>Turn Power Switch / Circuit Breaker ON

(Refrigerating/Heating Baths only)</td><td>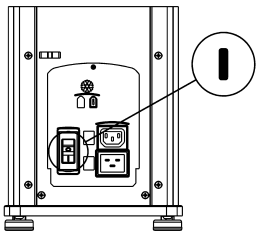</td></tr>
</table>

4	Turn Controller ON	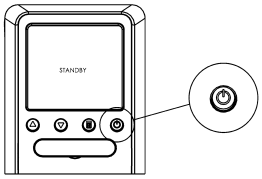
5	Enter temperature set point	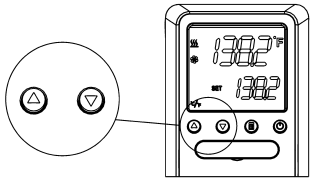
6	Set safety thermostat once unit reaches set point	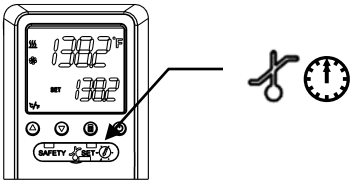

Installation and Startup

Your Circulating Bath with MX Temperature Controller is designed to be simple to set-up and install. The only tools required are a flat-head screwdriver and a container for adding water or another suitable fluid to the bath reservoir.

General Site Requirements

Locate your Circulator on a level surface free from drafts and direct sunlight. Do not place it where there are corrosive fumes, excessive moisture, high room temperatures, or in excessively dusty areas.

Refrigerating / Heating Circulators must be 10.2 cm / 4 inches or more away from walls or vertical surfaces so that airflow is not restricted.

Avoid voltage drops by using properly grounded power outlets wired with 14 gauge or larger diameter wire and if possible, be close to the power distribution panel. The use of extension cords is not recommended; this will reduce the potential for problems caused by low line voltage.

Adding Liquid to the Bath Reservoir

WARNING: Read the safety data sheet for the bath fluid being used carefully before filling reservoir.

WARNING: See *Technical Information* in the rear of this manual for a list of compatible liquids.

WARNING: If the proper fluid level is not maintained, the heater coil may become exposed and possibly damaged (fluid level too low) or the bath may overflow (fluid level too high).

The liquid in the reservoir should be maintained at a depth between 1 inch / 2.54 cm and 2.6 inches / 6.7 cm below the underside of the bath's top deck. Upon start up, it may be necessary to add fluid to the bath to compensate for the fluid required for external circulation. Likewise, be sure to compensate for fluid displacement when placing samples or other materials in the Circulator's reservoir.

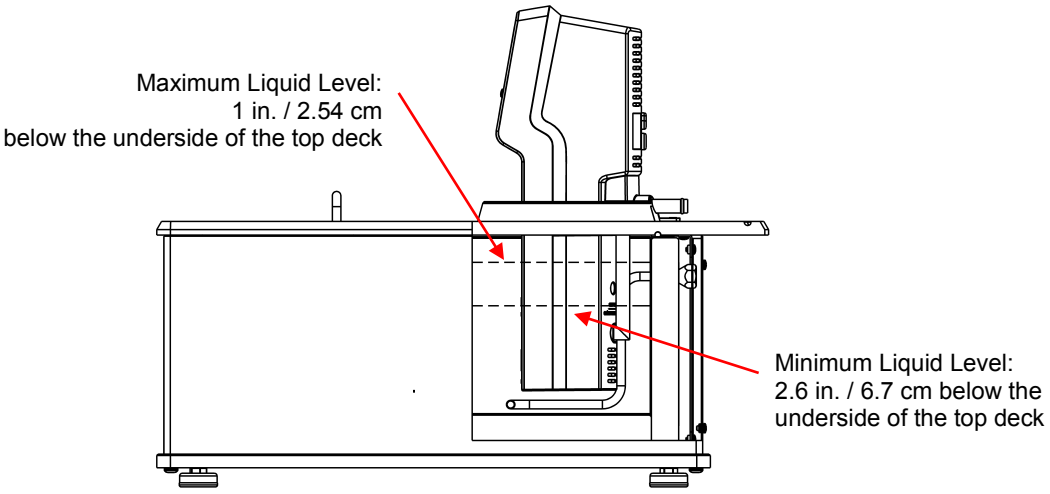

WARNING: Always drain all fluid from the reservoir before moving or lifting your Circulator. Be sure to follow your organization's procedures and practices regarding the safe lifting and relocation of heavy objects.

WARNING: To avoid the potential for burns, allow the Circulator to cool completely before cleaning or performing any maintenance.

External Closed Loop Circulation

	**WARNING:** When connecting tubing to an external application, it is the user's responsibility to make sure that the tubing and fittings connected to the Circulator are suitable for the fluid being used and the temperature range of operation. **CAUTION:** The Circulator's bypass tubing is secured to the fluid inlet and outlet connections by high temperature nylon hose clamps, which can be removed by carefully cutting them with diagonal cutters. **CAUTION:** Secure the tubing to the inlet and outlet fittings using hose clamps with a minimum ID of 7/8 inch (22 mm). Do not operate the unit without hose clamps.

	**WARNING:** If the Circulating Bath will not be used for external circulation, the inlet and outlet ports should remain connected using the Buna N bypass tubing provided with the unit.

The single speed pump on your Circulating Bath permits closed loop circulation to an external apparatus via the ½ inch / 12.7 mm OD pump inlet and outlet ports on the rear of the MX Controller. To maintain adequate flow, avoid restrictions in the tubing. If a higher flow rate is desired you can move the flow adjuster toward a closed position as shown below.

The control stability of a closed loop system is better at the external apparatus than in the immediate vicinity of the heater (provided the apparatus control point represents a constant load and is well insulated). For example, if you circulate through a viscometer at 50°C the temperature variation observed in the reservoir may be ±0.1°C, whereas in the viscometer it may be only ±0.05°C.

Although stability is better at the external apparatus control point, depending on the insulation and length of tubing used, the accuracy of temperature may be slightly different than the temperature indicated in the reservoir.

Connection to external devices which utilize a Quick Connect Coupling is not recommended due to potential reduction in flow rate of circulating fluid, which may ultimately affect temperature stability at the external device.

	**NOTE:** Coliform Baths are not equipped for external circulation.



Refrigeration Control Connections (Refrigerating/Heating Circulators only)

Attach the Refrigeration Control Cable connected to the rear of the Temperature Controller to the Refrigeration Control Connection on the Refrigeration Power Module.

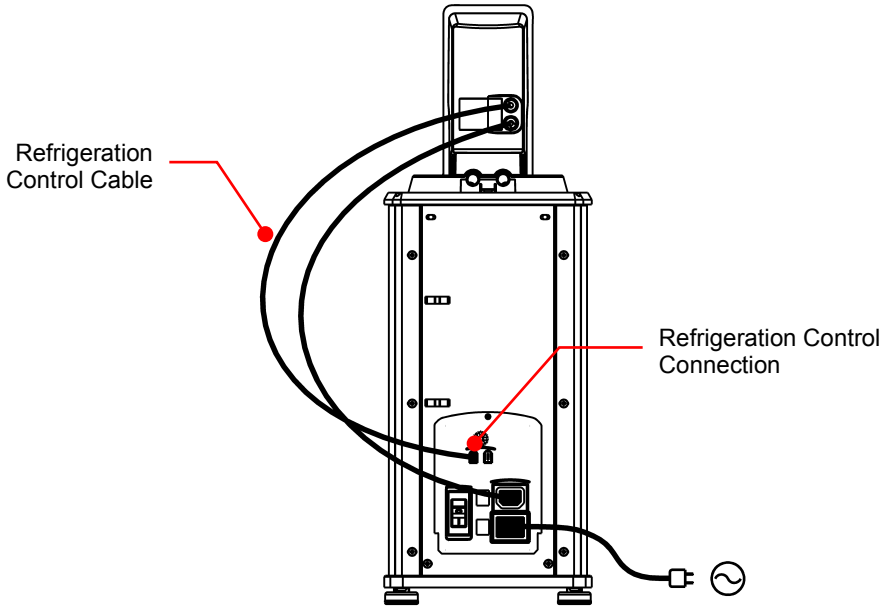

Electrical Power

	**WARNING:** The Circulator's power cord must be connected to a properly grounded electrical receptacle. Make certain that this electrical outlet is the same voltage and frequency as your Circulator. The correct voltage and frequency for your Circulator are indicated on the identification label on the back of the Controller.

	**CAUTION:** The use of an extension cord is not recommended. If one is necessary, it must be properly grounded and capable of handling the total wattage of the unit. The extension cord must not cause more than a 10% drop in voltage to the unit.

Refrigerating / Heating Circulators

Attach the Temperature Controller's power cord to the female IEC connector on the Refrigeration Power Module.

Attach the 6-ft / 1.8 m power cord to the IEC electrical connection on the Refrigeration Power Module and then plug the male connector into the Mains electrical outlet.

Place the Power Switch / Circuit Breaker on the Refrigeration Power Module in the ON position. The LCD on the Controller will light and "Standby" will appear on the display.

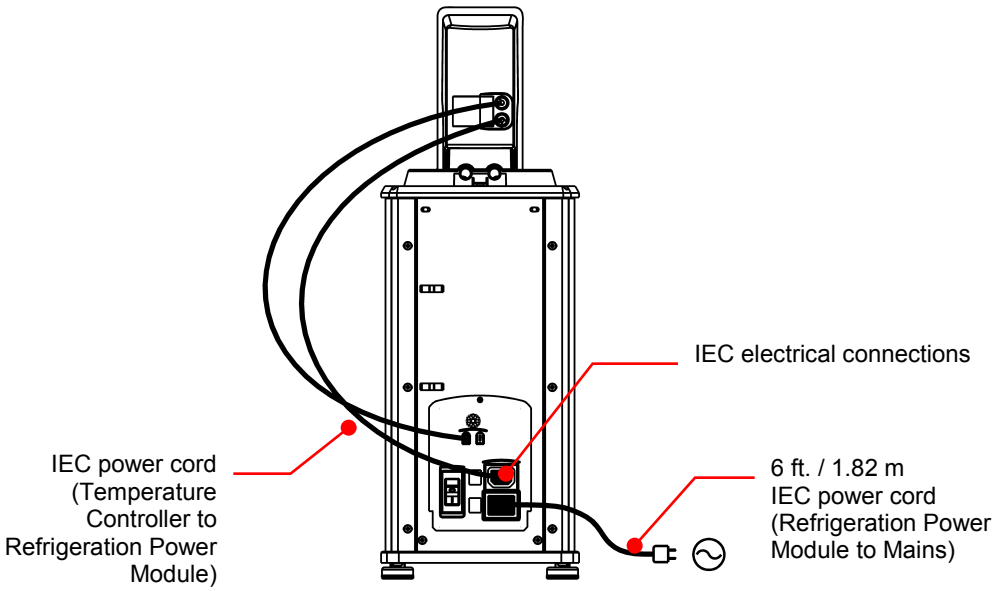

All Other Circulators

Plug the male connector on the Temperature Controller's power cord into the Mains electrical outlet. The LCD on the Controller will light and "Standby" will appear on the display.

	**NOTE:** 50 Hz models supplied with a country specific electrical cord and plug.

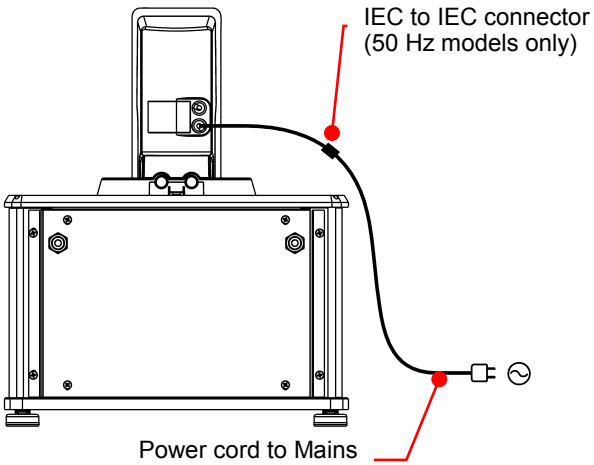

Controller Setup

Power

Press ⏻; all characters and symbols on the LCD will momentarily light. The Circulator will begin running, actual and set point temperatures will be displayed, and the word “SET” will be continuously lit. The circulating symbol will also be lit and the heating or refrigerating symbol may be lit or flashing.



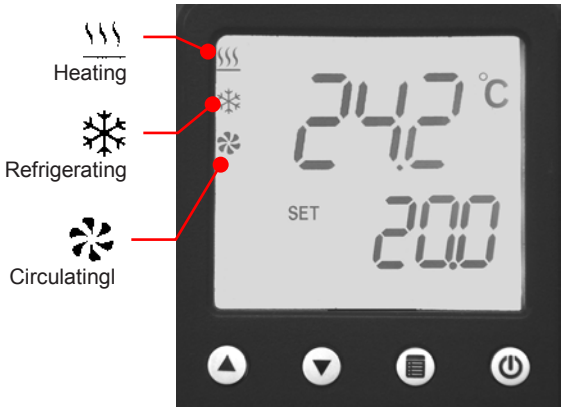

Safety Set Temperature

This is a “Do Not Exceed” temperature setting for your Circulator and is the temperature at which the heater will be turned OFF should the liquid level in the bath drop too low or the Circulator malfunctions. It is normally set about 5° higher than the desired operating temperature. Setting the Safety Set temperature is a four-step process.

1. Using a flat blade screwdriver, rotate the Safety Thermostat (located beneath the cover plate) clockwise until it stops.



2. Press the ▲ or ▼ key; “SET” will begin flashing. Continue pressing the ▲ and ▼ keys until the set point temperature is equal to your desired Safety Set temperature. “SET” will stop flashing approximately 10 seconds after the desired temperature has been entered. Allow the Circulator to stabilize at this temperature.

3. Once the bath temperature has stabilized, slowly rotate the Safety Thermostat counter-clockwise until you hear a soft “click;” the OVERTEMP or LOW FLUID alarm symbol will appear on the display approximately 5-10 seconds later. At this point, the heater will also turn OFF.

4. Slowly rotate the Safety Thermostat clockwise until the alarm symbol extinguishes (you may also hear a soft “click”). The heater should turn back ON. You are now ready to start normal operation.



OVERTEMP / LOW FLUID Alarm

⚠	**WARNING:** The Safety Thermostat is user-adjustable from approximately 40° to 155°C. Do not force the indicator dial beyond the stops at either end of the dial’s range.

Normal Operation

Keys and Controls

Power		Turns the Circulator's Temperature Controller ON.
Menu		Accesses the Temperature Controller's set-up sub-menus. The items in these sub-menus are used to configure the Controller's general operational parameters (temperature unit, upper and lower temperature limits, offset calibration, etc.).
Up Arrow		Used to increase temperature set point and other operational settings/values.
Down Arrow		Used to decrease temperature set point and other operational settings/values.

Turning Your Circulator ON

Press the  key.

All characters/symbols on the LCD will momentarily light. When the Circulator begins running, the actual and set point temperatures will be displayed and the circulating symbol will be lit.

If the actual bath temperature is lower than the set point temperature, the heating symbol will also be lit.

Refrigerating/Heating Models: If the actual bath temperature is higher than the set point temperature, the refrigerating symbol will be lit. It is normal for both the heating and refrigerating symbols to be lit simultaneously when nearing or maintaining the set point temperature.

Main Operational Display

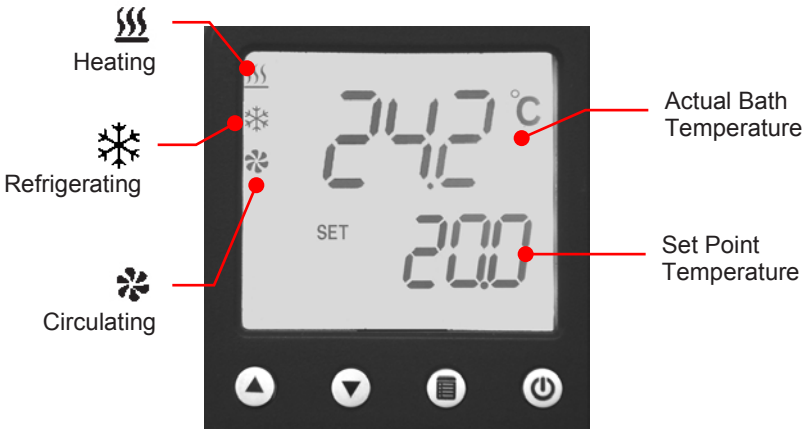

Set-Up Sub-Menus

Press the key to access the Temperature Controller's set-up sub-menus. The ▲ or ▼ keys are used to change the current setting / value in the sub-menu.

Sub-Menu	Selection / Range	To Change Current Value
Temperature unit	°C or °F	Press ▲ for °C Press ▼ for °F
Offset Calibration	-3.0°C to +3.0°C	Press ▲ or ▼
Low Limit	-35° to +10°C / -30° to +50°F	Press ▲ or ▼
High Limit	+40° to +140°C / +100 to +285°F	Press ▲ or ▼
Auto Cool	1° to 135°C / 34° to 275°F (15L and larger reservoirs) 1° to 70°C / 34° to 158°F (7L reservoirs)	Press ▲ or ▼

To accept a value in a sub-menu, press or allow the display to 'time out' (approximately 10 seconds).

Adjusting the Temperature Set Point

This is the temperature at which the fluid in your Circulating Bath will be maintained. It may be set to one-tenth of a degree over a range of -30.0° to +135.0°C / -20.0° to +275.0°F. The factory default set point is +20.0°C / +68.0°F.



To Change: Press the ▲ or ▼ key. The word "SET" will begin flashing. Continue holding or repeatedly press ▲ or ▼ until the desired set point temperature is displayed.

To Accept: Press or allow the LCD to return to the main operational display (approximately 10 seconds).

Selecting the Temperature Unit

The temperature units sub-menu (°C / °F) allows you to select the temperature unit in which the actual bath temperature and set point temperature are displayed. The factory default is °C.

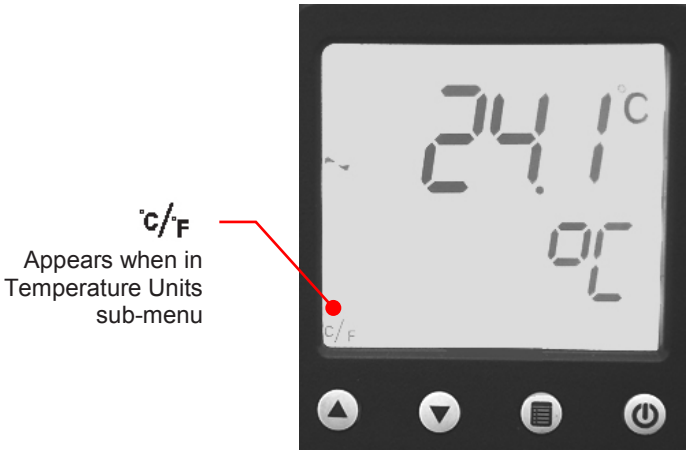

To Access: Press the key until °C/°F appears on the display.

To Change: Press to select °C; press to select °F.

To Accept: Press or allow the LCD to return to the main operational display (approximately 10 seconds).

Setting the Offset Calibration

This sub-menu allows you to match the Circulator's temperature display to an external reference thermometer. A value from -3.0° to +3.0°C may be entered; the factory default is 0.0°C.

IMPORTANT: To prevent the Offset Calibration value from being changed unintentionally, the following power down/power up sequence is required to enable the Offset Calibration function.

Refrigerating Circulators:

1. Place the power switch/circuit breaker on the rear of the unit in the OFF position.
2. Return the power switch/circuit breaker to the ON position while pressing and holding the key.
3. When STANDBY appears on the display, release the key and press . You can now proceed as outlined below.

Heat Only Circulators:

1. Disconnect the power cord from the electrical outlet.
2. Plug the power cord back into the electrical outlet while pressing and holding the key.
3. When STANDBY appears on the display, release the key and press . You can now proceed as outlined below.

The Offset Calibration function will remain enabled until the electrical power is turned OFF by pressing the key.

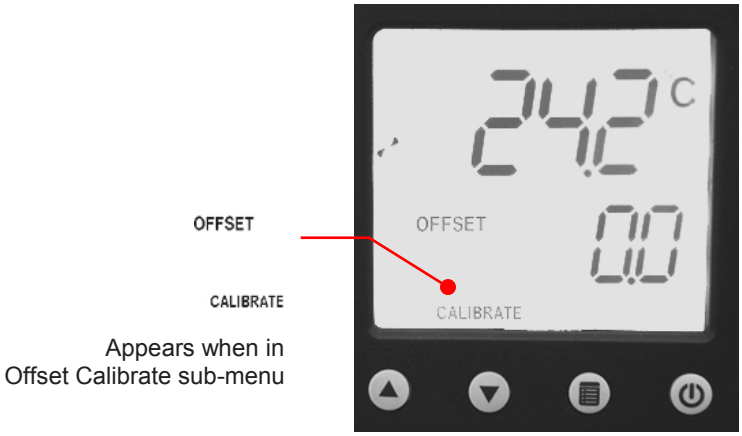

To Access: Press the key until OFFSET CALIBRATE appears on the display.

To Change: Press or .

To Accept: Press or allow the LCD to return to the main operational display (approximately 10 seconds).

CAUTION: The Offset Calibration value is always shown in degrees C, even if degrees F is selected as the temperature unit in which the control and actual bath temperatures are displayed. Your Circulator will automatically convert the °C offset calibration value to the correct °F display offset value.

Setting the Low Limit Temperature

This sub-menu allows you to limit how low the temperature set point may be set. It also serves as a low limit safety, alerting you if bath temperature falls below the low limit temperature setting. The Low Limit value may be set from -35° to +10°C / -30° to +50°F; the factory default is -35°C / -30°F.

To avoid unwanted alarms or shutdowns during regular operation, the Low Limit value should be set at least 5° lower than the selected control temperature.



LOW LIMIT

Appears when in the Low Limit sub-menu

To Access: Press the key until LOW LIMIT appears on the display.

To Change: Press or .

To Accept: Press or allow the LCD to return to the main operational display (approximately 10 seconds).

Setting the High Limit Temperature

This sub-menu allows you to limit how high the temperature set point may be set. It also serves as a high limit safety, alerting you if bath temperature rises above the high limit temperature setting. The High Limit value may be set from +40° to +140°C / +100° to +285°F; the factory default is +140°C / +285°F.

To avoid an unwanted shutdown during regular operation, the High Limit value should be set at least 5° higher than the selected control temperature.



HIGH LIMIT

Appears when in the High Limit sub-menu

To Access: Press the key until HIGH LIMIT appears on the display.

To Change: Press or .

To Accept: Press or allow the LCD to return to the main operational display (approximately 10 seconds).

Adjusting the Auto Cool Temperature

This sub-menu is displayed only on Refrigerating / Heating Circulators. It determines the bath temperature at which refrigeration will be activated and permits more precise control when operating at high temperatures as well as more rapid cool downs. For most applications, an Auto Cool set point 15°C above room temperature is recommended. The Auto Cool range is from 1° to 135°C. The factory default is 45°C.

Cool Command™ Refrigeration — Refrigerating/Heating Circulators with 15 liter and larger reservoirs feature the Cool Command™ modulating refrigeration control system. Cool Command™ allows the refrigeration system to turn on at a fluid temperature up to 135°C when the temperature set point is changed to or below the Auto Cool set point (135°C maximum). As a result, bath fluid cools more quickly.

Conventional Refrigeration — Refrigerating/Heating Circulators with 7 liter reservoirs use a conventional refrigeration system. The refrigeration system will turn on when the bath temperature and set point are below the Auto Cool set point (70°C maximum).



AUTO COOL

Appears when in the AUTO COOL menu

To Access: This Press the key until AUTO COOL appears on the display.

To Change: Press or .

To Accept: Press or allow the LCD to return to the main operational display (approximately 10 seconds).

Resetting the Factory Default Values

You can return your Circulator to all factory-set defaults as follows:

1. Press the ⏻ key to turn the Circulator OFF.
2. Turn Mains power OFF by unplugging the power cord from the electrical outlet or (Refrigerating/Heating Circulators) placing the power switch/circuit breaker on the Refrigeration Power Module in the OFF position.
3. Turn Mains power ON while pressing the ▲ button.

The factory default values are:

Operational Parameter	Factory Default Value
Temperature Scale	°C
Temperature Set Point	20°C / 68°F
Calibration Offset	0.0°C
Low Limit	-35°C / -30°F
High Limit	140°C / 285°F
Auto Cool	45°C

Loss of Power Restart



WARNING: The unit will start automatically after a disruption in electrical power.

In the event that electrical power is lost while your Circulator is in use, it will begin operating automatically once power is restored. FAIL POWER will appear on the display to alert you that there was a power disruption. To clear the message, turn the Circulator OFF and then back ON again using the ⏻ key.



FAIL POWER

Indicates electrical power was disrupted during operation

Tap Water Cooling

Tap water cooling allows for more rapid bath cool down from high temperatures and/or more precise operation at temperatures near ambient.

Heat only Circulating Baths feature an integrated cooling coil as standard equipment. The tap water connections are made on the rear of the unit. Two 0.25 inch / 6.4 mm female NPT fittings are provided for these connections.

Glass Viscosity Baths feature a cooling coil with two 0.375 inch / 9.5 mm OD straight barb fittings at which the fluid inlet and outlet connections can be made. Either connection may serve as the fluid inlet or outlet. Be sure to secure the tubing with the appropriate size hose clamps.

An optional cooling coil is available for use on the Coliform Bath and Stainless Steel Open Bath Systems. This cooling coil has two 0.375 inch / 9.5 mm OD straight barb fittings at which the fluid inlet and outlet connections can be made. Either connection may serve as the fluid inlet or outlet. Be sure to secure the tubing with the appropriate size hose clamps.

	**WARNING:** The fluid outlet must be connected and flow to a suitable drain or vessel located at a level below that of the inlet.

Reservoir Cover Storage

Refrigerating/Heating and Heat Only Circulating Baths feature the LidDock® system to eliminate mess when adding fluid or samples to the reservoir. Specially positioned notches in the inner lip of the top deck allow you to stand the reservoir cover up upright over the bath opening, allowing condensate to flow back into the bath.



Display Messages and Alarms

Alarm Symbol	Description	Corrective Action
FAIL POWER	**Informational Message:** Indicates that electrical power was lost during operation.	Using the key, turn the Circulator OFF and then back ON. This will clear the message.
LOW LIMIT (flashing)	**Warning:** The temperature set point is below the Low Limit temperature value.	Decrease the Low Limit temperature value or increase the temperature set point.
HIGH LIMIT (flashing)	**Warning:** The temperature set point is above the High Limit temperature value.	Increase the High Limit temperature value or decrease the set point temperature.
⚠ LOW LIMIT	**Alarm:** The bath temperature has fallen below the Low Limit temperature value. Power to the compressor and pump will remain OFF until the problem is corrected.	Allow bath to warm or add heat load. Decrease the Low Limit temperature value.
⚠ HIGH LIMIT	**Alarm:** The bath temperature has risen above the High Limit temperature value. Power to the heater and pump will remain OFF until the problem is corrected.	Allow bath to cool or increase High Limit temperature value. Replace fluid.
OVERTEMP OR LOW FLUID	**Fault:** The liquid in the bath has dropped too low or the temperature of the bath fluid has exceeded the Safety Set temperature. Power to the heater will remain OFF until the problem is corrected.	Fluid level in reservoir has fallen below minimum level; add fluid as required. Fluid temperature is higher than Safety Set temperature; increase Safety Set temperature setting. Controller failure; consult factory.
INTERNAL FAIL PROBE	**Fault:** The Circulator's temperature sensor has failed.	Consult factory.
HEATER FAIL	**Fault:** The Circulator's heater has failed.	Consult factory.

Routine Maintenance and Troubleshooting

	**WARNING:** Always turn your Circulating Bath OFF and disconnect it from the electrical power outlet before performing any maintenance or service.

	**WARNING:** To avoid the potential for burns, allow the Circulating Bath to cool completely before cleaning or performing any maintenance.

	**WARNING:** Always drain all fluid from the reservoir before moving or lifting your Circulator. Be sure to follow your organization's procedures and practices regarding the safe lifting and relocation of heavy objects.

Maintaining Clear Bath Water

Optimum temperature and moisture conditions for algae growth exist when using water as a bath fluid. To prevent algae contamination and minimize the frequency of draining the reservoir, an algaecide such as polyclean Algaecide (004-300040) should be used.

	**WARNING:** Do not use chlorine bleach.

Draining the Bath Reservoir

	**WARNING:** Bath fluids should be stored and disposed of according to applicable laws and regulations.

<u>Refrigerated / Heating and Heat only Circulating Baths</u>

Refrigerated / Heating and Heat only Circulating Baths are equipped with a drain valve and port located either behind the front access panel or on the right hand side of the unit.

To drain fluid from the bath, attach a short length of suitable 0.45 inch / 11.5 mm ID tubing to the drain port and secure it using a hose clamp with a minimum ID of 0.7 inch / 18 mm. Open the drain valve using a flat blade screwdriver. When closing the valve, do not over tighten.

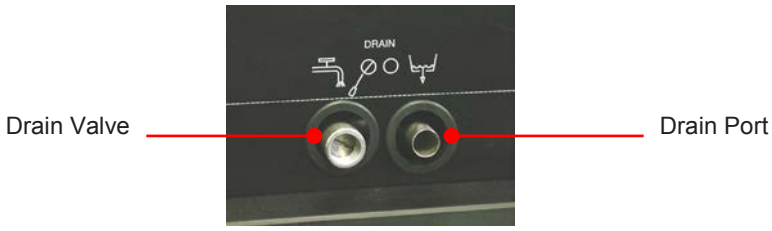

	**WARNING:** Be sure to close the drain valve before refilling the bath reservoir. Do not over tighten.

Polycarbonate Open Tank Circulators

Larger capacity (17 liter and above) polycarbonate open tank Circulating Baths are equipped with a drain port. To drain fluid from these baths, remove the knurled cap. When replacing the cap, do not over tighten.

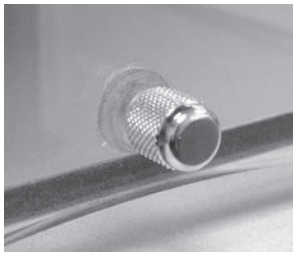

	**WARNING:** Be sure to replace and tighten knurled cap before refilling the bath reservoir.

Checking the Over-Temperature Safety System

Your Circulator incorporates over-temperature protection according to IEC 61010. For optimum safety, this system should be checked for proper operation at least every six months. This check must be performed with the unit running.

1. Enter a temperature set point of approximately 50°C and then allow the bath to stabilize at that temperature. The amount of time this will take will depend on the size of the bath and the difference between the initial bath temperature and the Safety Set temperature.

2. Once the bath temperature has stabilized, slowly rotate the Safety Thermostat counter-clockwise until you hear a soft “click;” the OVERTEMP or LOW FLUID alarm symbol will appear on the display approximately 5-10 seconds later. At this point, the heater will also turn OFF.

3. Slowly rotate the Safety Thermostat clockwise until the alarm symbol extinguishes (you may also hear a soft “click”). The heater should turn back ON.

4. Reset the Safety Set temperature to the desired temperature value (see *Controller Setup, Safety Set Temperature*).



Cleaning Your Circulator

⚠	**WARNING:** It is the user's responsibility to properly decontaminate the unit in the event hazardous materials are spilled on exterior or interior surfaces. Consult the manufacturer if there is any doubt regarding the compatibility of decontamination or cleaning agents.

Temperature Controller

Turn the Temperature Controller OFF by pressing ⏻ and unplug power cord from the electrical outlet.

Wipe the housing with a clean cloth dampened with a mild detergent and water or mild all-purpose cleaner.

⚠	**CAUTION:** Do not spray cleaning liquids directly onto the Temperature Controller or allow them to enter the Controller's vents. Do not use abrasives as these could scratch the housing or the digital display.

Bath Reservoir

⚠	**CAUTION:** Do not use steel wool to clean your Circulator's bath reservoir.

Bath Reservoir and Wetted Components — A concentrated bath cleaner (polyclean Bath Cleaner, part number 004-300050) is available to remove mineral deposits from the stainless steel reservoir and the Temperature Controller's wetted parts. The cleaner should be added to the bath reservoir at the prescribed dosage and circulated at 60°C / 140°F until the scale is removed.

External Surfaces — Only mild detergents and water or an approved cleaner should be used on the top deck and other external surfaces of your Circulator.

Pump Impeller — In the unlikely event that debris becomes lodged in the pump impeller, a soft brush can be used to remove any lodged particles. If necessary, soak in a solution of distilled water and polyclean Bath Cleaner to soften before brushing.

⚠	**CAUTION:** Do not use hard utensils or abrasive pads to remove trapped debris.

Condenser, Air Vents, and Reusable Filter
(Refrigerated Models only)

To keep the refrigeration system operating at optimum cooling capacity, the condenser, removable air filter, and all air vents (front, side, back) should be kept free of dust and dirt. Be sure to check them on a regular basis and clean as required.

The reusable filter is easily accessed from the front of the unit by simply removing the access panel. Use a mild detergent and water solution to wash off any accumulated dust and dirt. Rinse and dry thoroughly before reinstalling.

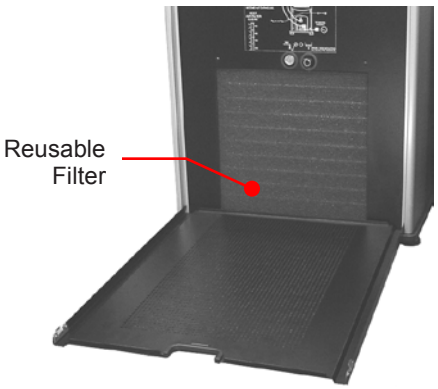

Temperature Controller Removal and Re-Installation

Removal

The Temperature Controller on your Circulating Bath is designed to be easily removed from the top deck without the use of special tools. It is removed as follows:

1. Place the tip of a small flat blade screwdriver under the retaining ring locking tab and pry up gently.

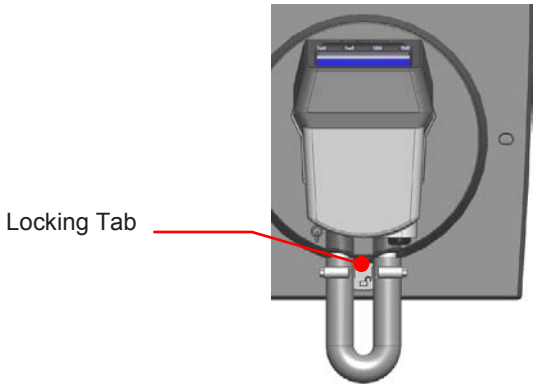

2. Rotate the Temperature Controller clockwise until it stops (about 0.75 inch / 1.9 cm).

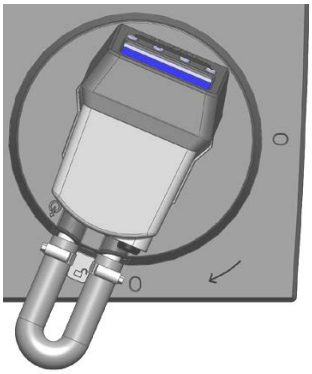

3. Lift the Controller straight up and out of the opening of the Circulator's top deck.

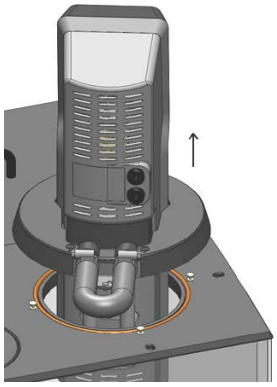

Re-Installation

The top deck of your Circulator incorporates four alignment pins to facilitate positioning of the Temperature Controller when it is being reinstalled. These pins correspond to keyhole slots on the interior of the Circulator's retaining ring.

1. With the retaining ring locking tab oriented above one of the indents on the top deck, slowly lower the Temperature Controller into the top deck opening until it is resting on top of the positioning pins.

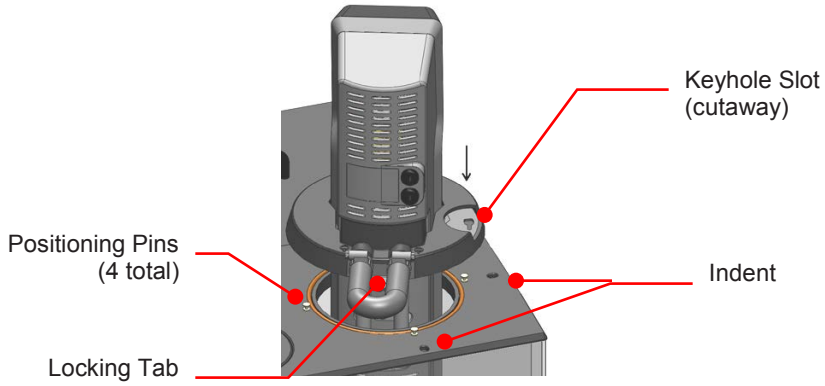

2. Gently rotate the Temperature Controller until it drops down on the Positioning Pins.

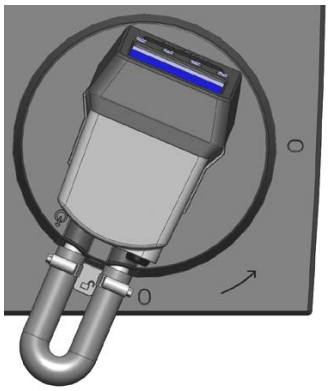

3. Rotate the Temperature Controller counterclockwise until the Locking Tab engages the indent on the top deck.

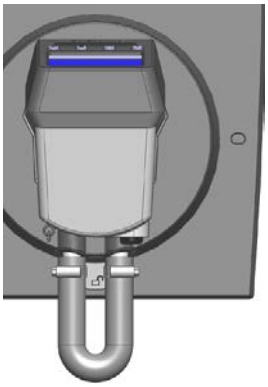

Troubleshooting Chart

Problem	Possible Causes	Corrective Action
Unit does not run (Digital Display is blank)	No power to unit	Check that the electrical cord is secure and connected to an operating electrical outlet.
	Refrigerated units only Electrical cord between Control Head and Refrigeration Power Module loose or unplugged	Check that the electrical cord is secure and properly connected.
	Power Switch / Circuit Breaker in OFF position	Place Power Switch / Circuit Breaker in ON position.
Unit does not run (STANDBY appears on Digital Display)	Unit in Standby mode	Press Power Key on front panel.
No fluid circulation	Insufficient fluid in reservoir	Add fluid to reservoir.
	Pump impeller jammed	Inspect pump and remove debris as required.
Insufficient circulation	Fluid viscosity too high	Replace with lower viscosity bath fluid.
	External tubing diameter too small	Replace with larger diameter tubing.
	Low line voltage	Check and correct as required.
Unit does not heat	Insufficient fluid in reservoir	Add fluid to reservoir.
	Temperature set point too low	Increase temperature set point.
	Safety Set Temperature too low	Increase Safety Set temperature.
Insufficient heating	Insufficient circulation	See Insufficient circulation, above.
	Low line voltage	Check and correct as required.
	Ambient temperature too cool	Increase ambient temperature or relocate unit.
	Excessive heat loss	Check for heat loss from external tanks and hoses; Check for vapor/heat loss from internal reservoir.
Temperature unstable	Insufficient circulation	Check pump flow and operation.
	Debris or mineral build-up on pump, heater, or temperature sensor.	Clean as required.
Unit does not cool	Dust build up on air filter or condenser	Clean air filter and/or condenser as required.
	Blocked air ventilation screens	Remove blockages as required.
	Temperature set point is too high	Decrease temperature set point.
	Excessive heat load	Check that heat load does not exceed capacity of bath; correct as required.
	Ambient air temperature too high (>35°C / 95°F)	Decrease ambient air temperature.
	Low or high line voltage	Check and correct as required.

Problem	Possible Causes	Corrective Action
Insufficient cooling	Dust build up on air filter or condenser	Clean air filter and/or condenser as required.
	Blocked air ventilation screens	Remove blockages as required.
	Temperature set point is too high	Decrease temperature set point.
	Excessive heat load	Check that heat load does not exceed capacity of bath; correct as required.
	Ambient air temperature too high (>35°C / 95°F)	Decrease ambient air temperature.
	Low or high line voltage	Check and correct as required.
Unable to achieve low end extreme temperatures	Pump speed too high	Reduce pump speed.
	Incorrect bath fluid	Check that the fluid being circulated is capable of reaching the required temperature.
	Insufficient insulation on external fluid lines	Check external fluid lines for proper insulation.
	Ambient air temperature too high (>35°C / 95°F)	Decrease ambient air temperature as required.
	Low or high line voltage	Check and correct as required.
	Dust build up on air filter or condenser	Clean air filter or condenser as required.
	Blocked air ventilation screens	Remove blockages as required.
	Excessive heat load	Check that heat load does not exceed capacity of bath; correct as required.

Technical Information

Performance Specifications

Operating Temperature Range:	Model dependent; see table below	
Temperature Stability:	±0.07C (±0.13°F)	
Pump Type:	1-speed pressure	
	60Hz models	50Hz models
Maximum Pressure:	2.3 psi (0.16 bar)	1.8 psi (0.12 bar)
Maximum Pressure Flow Rate:	3.6 gpm (13.5 lpm)	3.1 gpm (11.9 lpm)
Heater Wattage:	1100 watts	1100 watts

Model Type	Reservoir Capacity	Temperature Range	Electrical Requirements	
			60Hz Units	50Hz Units
MX07R-20 Refrigerating / Heating Bath	7 liters	-20° to 135°C -4° to 275°F	120V, 60Hz, 12A	240V, 50Hz, 8A
MX7LR-20 Refrigerating / Heating Bath	7 liters	-20° to 135°C -4° to 275°F	120V, 60Hz, 12A	240V, 50Hz, 8A
MX15R-30 Refrigerating / Heating Bath	15 liters	-30° to 135°C -22° to 275°F	120V, 60Hz, 13A	240V, 50Hz, 10A
MX20R-30 Refrigerating / Heating Bath	20 liters	-30° to 135°C -22° to 275°F	120V, 60Hz, 13A	240V, 50Hz, 10A
MX07H135 Heating Only Bath	7 liters	Ambient +10° to 135°C Ambient +20° to 275°F	120V, 60Hz, 10A	240V, 50Hz, 6A
MX15H135 Heating Only Bath	15 liters	Ambient +10° to 135°C Ambient +20° to 275°F	120V, 60Hz, 10A	240V, 50Hz, 6A
MX20H135 Heating Only Bath	20 liters	Ambient +10° to 135°C Ambient +20° to 275°F	120V, 60Hz, 10A	240V, 50Hz, 6A
MX06S135 Stainless Steel Open Tank Bath	6 liters	Ambient +10° to 135°C Ambient +20° to 275°F	120V, 60Hz, 10A	240V, 50Hz, 6A
MX10S135 Stainless Steel Open Tank Bath	10 liters	Ambient +10° to 135°C Ambient +20° to 275°F	120V, 60Hz, 10A	240V, 50Hz, 6A
MX20S135 Stainless Steel Open Tank Bath	20 liters	Ambient +10° to 135°C Ambient +20° to 275°F	120V, 60Hz, 10A	240V, 50Hz, 6A
MX28S135 Stainless Steel Open Tank Bath	28 liters	Ambient +10° to 135°C Ambient +20° to 275°F	120V, 60Hz, 10A	240V, 50Hz, 6A
MX08P100 Polycarbonate Open Tank Bath	8 liters	Ambient +10° to 85°C Ambient +20° to 185°F (1)	120V, 60Hz, 10A	240V, 50Hz, 6A
MX11P100 Polycarbonate Open Tank Bath	11 liters	Ambient +10° to 85°C Ambient +20° to 185°F (1)	120V, 60Hz, 10A	240V, 50Hz, 6A
MX14P100 Polycarbonate Open Tank Bath	14 liters	Ambient +10° to 85°C Ambient +20° to 185°F (1)	120V, 60Hz, 10A	240V, 50Hz, 6A
MX17P100 Polycarbonate Open Tank Bath	17 liters	Ambient +10° to 85°C Ambient +20° to 185°F (1)	120V, 60Hz, 10A	240V, 50Hz, 6A
MX23P100 Polycarbonate Open Tank Bath	23 liters	Ambient +10° to 85°C Ambient +20° to 185°F (1)	120V, 60Hz, 10A	240V, 50Hz, 6A
MX28P100 Polycarbonate Open Tank Bath	28 liters	Ambient +10° to 85°C Ambient +20° to 185°F (1)	120V, 60Hz, 10A	240V, 50Hz, 6A

Model Type	Reservoir Capacity	Temperature Range	Electrical Requirements	
			60Hz Units	50Hz Units
MX17VB6G Glass Viscosity Bath	17 liters	Ambient +10° to 135°C Ambient +20° to 275°F	120V, 60Hz, 10A	240V, 50Hz, 6A
MX27VB6G Glass Viscosity Bath	27 liters	Ambient +10° to 135°C Ambient +20° to 275°F	120V, 60Hz, 10A	240V, 50Hz, 6A
MX28C135 Coliform Bath	28 liters	Ambient +10° to 135°C Ambient +20° to 275°F	120V, 60Hz, 10A	240V, 50Hz, 6A

1. Maximum operating temperature for polycarbonate tank; MX Controller is capable of higher temperatures.

Environmental Conditions	Indoor use only	
	Maximum Altitude:	2000 meter
	Operating Ambient:	5° to 35°C (41° to 95°F)
	Relative Humidity:	80%, non-condensing
	Installation Category:	II
	Pollution Degree:	2
	Ingress Protection:	IP 31
	Climate Class:	SN
	Software Class:	B
	Output Waveform:	Sinusoidal

Specifications subject to change without notice.

Reservoir Fluids

Depending on your needs, a variety of fluids can be used with your Circulator. No matter what bath fluid is selected, it must be chemically compatible with the reservoir and the materials in your Circulator. It must also be suitable for the desired temperature range.



WARNING: Do not use a flammable liquid as a bath fluid as a fire hazard may result.



WARNING: Always use fluids that satisfy safety, health, and equipment compatibility requirements.

For optimum temperature stability, the fluid's viscosity should be 50 centistokes (cSt) or less at its lowest operating temperature. This permits good fluid circulation and minimizes heating from the pump.

For temperatures from 10°C to 90°C, distilled water is recommended. For temperatures below 10°C, a mixture of laboratory grade ethylene glycol and water should be used. Do not use deionized water.

The following chart is intended to serve as a guide in selecting a bath fluid for your application. For optimum temperature stability and low vaporization, be sure to stay within the fluid's normal temperature range.

You are responsible for proper selection and use of the fluids. Avoid extreme range operation.

Fluid Description	Viscosity (cSt) @ 25°C	Specific Heat			Normal Temperature Range	Extreme Temperature Range
		@ Fluid Temperature	BTU/lb°F	KJ/Kg°C		
distilled water	1	50°C	1.00	4.18	10° to 90°C	2° to 100°C
polyclear MIX 30	1	50°C	1.00	4.18	15° to 90°C	2° to 100°C
polytherm S150	50	100°C	0.41	1.71	50° to 150°C	5° to 270°C*
polytherm S200	125	150°C	0.40	1.67	100° to 200°C	80° to 232°C*
polytherm S250	500	200°C	0.39	1.63	150° to 250°C	125° to 260°C*
polytherm M170	40	85°C	0.40	1.67	50° to 170°C	25° to 190°C
polycool HC -50	3	-30°C	0.62	2.59	-50° to 100°C	-62° to 118°C
polycool EG -25 (50/50 mix with distilled H_2O)	20	-20°C	0.78	3.26	-25° to 100°C	-30° to 115°C
polycool EG -25 (30/70 mix with distilled H_2O)	12	0°C	0.89	3.72	0° to 95°C	-15° to 107°C
polycool PG -20 (50/50 mix with distilled H_2O)	20	-10°C	0.83	3.47	-20° to 100°C	-30° to 115°C
polycool PG -20 (30/70 mix with distilled H_2O)	12	5°C	0.92	3.85	5° to 90°C	-10° to 107°C
polycool MIX -25 (50/50 mix with distilled H_2O)	20	-20°C	0.78	3.26	-25° to 100°C	-30° to 115°C
polycool MIX -25 (30/70 mix with distilled H_2O)	12	0°C	0.89	3.72	0° to 95°C	-15° to 107°C



***WARNING:** This is the fluid's flash point temperature.



WARNING: DO NOT USE THE FOLLOWING LIQUIDS:

- Automotive antifreeze with additives**
- Hard tap water**
- Deionized water with a specific resistance > 1 meg ohm
- Any flammable fluids
- Concentrations of acids or bases
- Solutions with halides: chlorides, fluorides, bromides, iodides or sulfur
- Bleach (Sodium Hypochlorite)
- Solutions with chromates or chromium salts
- Glycerine
- Sylltherm fluids

** At temperatures above 40°C, additives or mineral deposits can adhere to the heater. If deposits are allowed to build up, the heater may overheat and fail. Higher temperatures and higher concentrations of additives will hasten deposit build up.

Application Notes

At a fluid's low temperature extreme:

- The presence of ice or slush adversely affects temperature stability.
- A viscosity above 10 centistokes adversely affects temperature uniformity.
- A high fluid viscosity and high pump speed adds heat to the fluid being pumped.

At a fluid's temperature above ambient without refrigeration:

- If your set point temperature is less than 15°C above the ambient temperature, the viscosity of the fluid should be 10 centistokes or less to minimize friction heating of the fluid.
- Heat loss should be encouraged by uncovering the fluid and lowering the pump speed.

At fluid's high temperature extreme:

- Heat loss from vapor adversely affects temperature stability.
- To prevent the accumulation of vapors inside the room, the reservoir may need to be placed in a fume hood.
- Use a cover and/or floating hollow balls to help prevent heat and vapor loss.
- Replenish fluid lost from vapor frequently.

Equipment Disposal (WEEE Directive)



or



This equipment is marked with the crossed out wheeled bin symbol to indicate it is covered by the Waste Electrical and Electronic Equipment (WEEE) Directive and is not to be disposed of as unsorted municipal waste. **Any products marked with this symbol must be collected separately, according to the regulatory guidelines in your area.**

It is your responsibility to correctly dispose of this equipment at lifecycle-end by handing it over to an authorized facility for separate collection and recycling. It is also your responsibility to decontaminate the equipment in case of biological, chemical and/or radiological contamination, so as to protect the persons involved in the disposal and recycling of the equipment from health hazards. By doing so, you will help to conserve natural and environmental resources and you will ensure that your equipment is recycled in a manner that protects human health.

Requirements for waste collection, reuse, recycling, and recovery programs vary by regulatory authority at your location. Contact your local responsible body (e.g., your laboratory manager) or authorized representative for information regarding applicable disposal regulations.

Replacement Parts and Accessories

Description	Part Number
IEC to IEC Power Cord (Refrigerating/Heating Circulators)	225-661
IEC to Mains Power Cord, U.S. plug type, 120V, 60Hz (Refrigerating/Heating Circulators)	225-473
IEC to Mains Power Cord, European plug type, 240V, 50Hz (Refrigerating/Heating Circulators)	225-228
Refrigeration Control Cable (Refrigerating/Heating Circulators)	525-879
Line Cord with European type Plug; 240V, 50Hz	225-346
Reservoir Cover for 7L Refrigerating/Heating and Heat only Circulators	510-726
Reservoir Cover for 15L Refrigerating/Heating and Heat only Circulators	510-727
Reservoir Cover for 20L Refrigerating/Heating and Heat only Circulators	510-728
Bath Cover for 8L Polycarbonate Open Bath	510-693
Bath Cover for 11L Polycarbonate Open Bath	510-694
Bath Cover for 14L Polycarbonate Open Bath	510-695
Bath Cover for 17L Polycarbonate Open Bath	510-696
Bath Cover for 23L Polycarbonate Open Bath	510-697
Bath Cover for 28L Polycarbonate Open Bath	510-698
Bath Cover for 6L Stainless Steel Open Bath	510-700
Bath Cover for 10L Stainless Steel Open Bath	510-701
Bath Cover for 20 and 28L Stainless Steel Open Baths	510-702
Lid for Viscosity Tube Opening, round, 2.25 inch diameter	300-760
Lid for Cooling Coil Opening, round, 3.63 inch diameter (for 10L, 20L and 28L Stainless Steel Open Baths; 17L, 23L and 28L Polycarbonate Open Baths; and Coliform Bath	300-749
Lid for Cooling Coil Opening with slots for cooling coil; round, 3.63 inch diameter (for 10L, 20L and 28L Stainless Steel Open Baths; 17L, 23L and 28L Polycarbonate Open Baths; and Coliform Bath	300-779
Cooling Coil Kit for 10L, 20L and 28L Stainless Steel Open Baths; 17L, 23L and 28L Polycarbonate Open Baths; and Coliform Bath	510-649
Fitting, 1/2” (13 mm) barb to 1/4” (5 mm) barb; glass-filled nylon (1 each)	776-207
Fitting, 1/2” (13 mm) barb to 3/8” (9.5 mm) barb; glass-filled nylon (1 each)	776-205
Fitting, 1/2” (13 mm) barb to 5/16” (8 mm) barb; glass-filled nylon (1 each)	776-206
Fitting Kit for external applications	510-737
Bypass Kit, silicone tubing ½” ID x 6”	510-713

Description	Part Number
Pump Blades	702-894
Housing Assembly, bottom rear with slider	530-134
Safety Thermostat Cover Plate	300-717
Power Switch / Circuit Breaker (Refrigerated models)	215-330
Reusable Air Filter for MX7LR-20 Refrigerating/Heating Circulator	305-057
Reusable Air Filter for MX07R-20 Refrigerating/Heating Circulator	305-054
Reusable Air Filter for MX15R-30 and MX20R-30 Refrigerating/Heating Circulators	305-055
O-Ring for Drain Valve; Refrigerating/Heating and Heat only Circulators	400-934
Drain Cap for Polycarbonate Open Baths	510-756
Resource Disk (with Operator's Manual)	110-815

PolyScience Circulating Bath Fluids

Circulating Bath Fluids	Quantity	Part Number
polyclean Algaecide	8 oz / 236 ml	004-300040
polyclean Algaecide	Twelve 8 oz / 236 ml bottles	004-300041
polyclean Bath Cleaner	8 oz / 236 ml	004-300050
polyclean Bath Cleaner	Twelve 8 oz / 236 ml bottles	004-300051
polycool EG -25 (ethylene glycol)	1 gal / 4.5 liter	060340
polycool PG -20 (propylene glycol)	1 gal / 4.5 liter	060320
polycool HC -50 (water-based heat transfer fluid)	1 gal / 4.5 liter	060330
polytherm S150 (silicone oil)	1 gal / 4.5 liter	060326
polytherm S200 (silicone oil)	1 gal / 4.5 liter	060327
polytherm S250 (silicone oil)	1 gal / 4.5 liter	060328
polytherm M170 (mineral oil)	1 gal / 4.5 liter	060321
polycool MIX -25 (50/50 blend polycool EG -25 / H_2O plus polyclean algaecide)	Five 0.5 gal / 2.27 liter bottles	004-300060
polyclear MIX 30 (distilled water plus polyclean algaecide)	Five 0.5 gal / 2.27 liter bottles	004-300062

Service and Technical Support

If you have followed the troubleshooting steps outlined previously and your Circulator still fails to operate properly, contact the supplier from whom the unit was purchased. Have the following information available for the customer service person:

- Model, Serial Number, and Voltage (from back panel label)
- Date of purchase and purchase order number
- Supplier's order number or invoice number
- A summary of the problem

Warranty

The manufacturer agrees to correct for the original user of the product, either by repair (using new or refurbished parts), or at the manufacturer's election, by replacement (with a new or refurbished product), any defects in material or workmanship which develop during the warranty period. The standard warranty is twenty-four (24) months after delivery of the product. In the event of replacement, the replacement unit will be warranted for the remainder of the original warranty period or ninety (90) days, whichever is longer. For purposes of this limited warranty, "refurbished" means a product or part that has been returned to its original specifications. In the event of a defect, these are your exclusive remedies.

If the product should require service, contact the manufacturer's/supplier's office for instructions. When return of the product is necessary, a return authorization number is assigned and the product should be shipped, transportation charges pre-paid, in either its original packaging or packaging affording an equal degree of protection to the indicated service center. To insure prompt handling, the return authorization number must be placed on the outside of the package. A detailed explanation of the defect should be enclosed with the item.

The warranty shall not apply if the defect or malfunction was caused by accident, neglect, unreasonable use, improper service, acts of God, modification by any party other than PolyScience, or other causes not arising out of defects in material or workmanship.

EXCLUSION OF IMPLIED WARRANTIES. THERE ARE NO WARRANTIES, EXPRESSED OR IMPLIED, INCLUDING, BUT NOT LIMITED TO, THOSE OF MERCHANTABILITY OR FITNESS FOR A PARTICULAR PURPOSE WHICH EXTEND BEYOND THE DESCRIPTION AND PERIOD AS STATED IN THE OPERATOR'S MANUAL INCLUDED WITH EACH PRODUCT.

LIMITATION ON DAMAGES. THE MANUFACTURER'S SOLE OBLIGATION UNDER THE WARRANTY IS LIMITED TO THE REPAIR OR REPLACEMENT OF A DEFECTIVE PRODUCT AND POLYSCIENCE SHALL NOT, IN ANY EVENT, BE LIABLE FOR ANY INCIDENTAL OR CONSEQUENTIAL DAMAGES OF ANY KIND RESULTING FROM USE OR POSSESSION OF THIS PRODUCT.

Some states do not allow: (A) limitations on how long an implied warranty lasts; or (B) the exclusion or limitation of incidental or consequential damages, so the above limitations or exclusions may not apply to you. This warranty gives you specific legal rights and you may have other rights that vary from state to state.

Manufactured by:

PolyScience

6600 W. Touhy Avenue Niles, IL 60714 U.S.A.
1-800-229-7569 ● 1-847-647-0611
www.polyscience.com